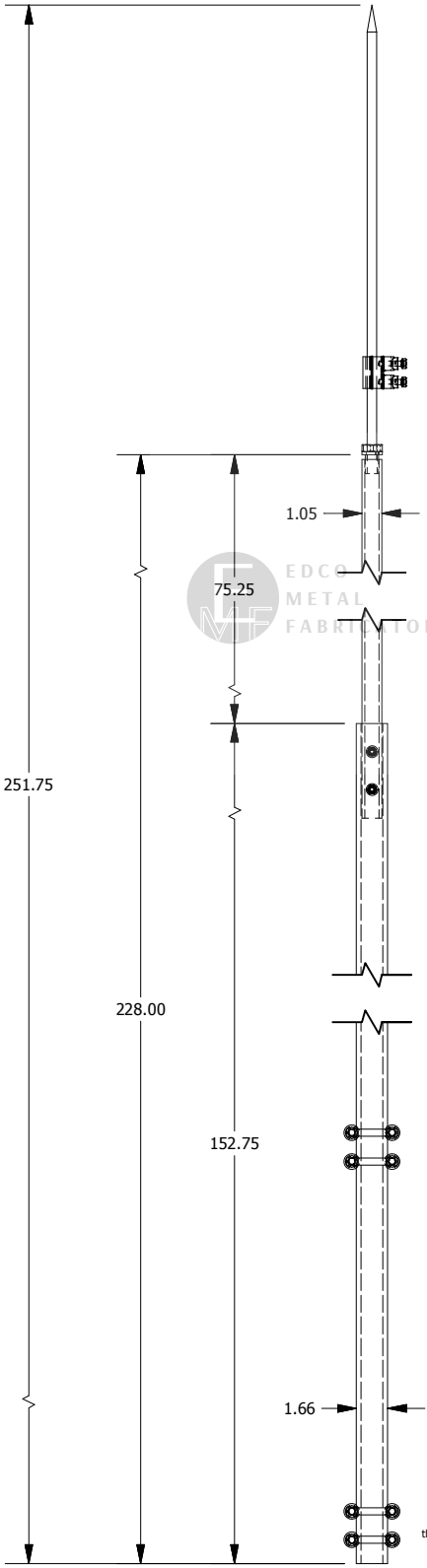

EDCO METAL FABRICATORS

PROPRIETARY
The information contained in this drawing is the sole property of EDCO INC Any reproduction or use in part or as a whole without the written permission of EDCO INC is prohibited.